Komunikasi Data &&& Jaringan Komputer

Network Communication

Computer Vision

@ P. Siagian

Transmisi Data
Pengkodean Data
Teknik Komunikasi Data Digital
Data Link Control
Multiplexing
Switching
Medium Access Sublayer
Multiple Access Control (MAC)
Protocols
Network Layer

Medium Access Sublayer

https://github.com/siagianp

https://www.youtube.com/@AmelOline/video

https://github.com/amelcharolinesgn2/IoT_simulator-mqtt-NodeRed

github.com/amelcharolinesgn2/ANJAR

Design Challenges in WMNs

- Hidden terminal problem
- Exposed terminal problem
- Control and management have to be *distributed* across all nodes.
- Multichannel networks:
  - distributed channel selection
  - channel assignment

Early MAC Schemes

ALOHA

- developed for packet radio nets
- when station has frame, it sends
- then listens for a bit over max round trip time
  - if receive ACK then fine
  - if not, retransmit
  - if no ACK after repeated transmissions, give up
- uses a frame check sequence (as in HDLC)
- frame may be damaged by noise or by another station transmitting at the same time (collision)
- any overlap of frames causes collision
- max utilization 18%

Slotted ALOHA

- time on channel based on uniform slots equal to frame transmission time
  - need central clock (or other sync mechanism)
- transmission begins at slot boundary
- frames either miss or overlap totally
- max utilization 37%
- both have poor utilization
- fail to use fact that propagation time is much less than frame transmission time

CSMA/CD

IEEE 802.3 MAC (Ethernet)

Ethernet (CSMA/CD)

- most widely used LAN standard
- developed by
  - Xerox - original Ethernet
  - IEEE 802.3
- Carrier Sense Multiple Access with Collision Detection (CSMA/CD)
  - random / contention access to media

CSMA

- stations soon know transmission has started
- so first listen for clear medium (carrier sense)
- if medium idle, transmit
- if two stations start at the same instant, collision
  - wait reasonable time
  - if no ACK then retransmit
  - collisions occur at leading edge of frame
- max utilization depends on propagation time (medium length) and frame length

Nonpersistent CSMA

- Nonpersistent CSMA rules:
  1. if medium idle, transmit
  2. if medium busy, wait amount of time drawn from probability distribution (retransmission delay) & retry
- random delays reduces probability of collisions
- capacity is wasted because medium will remain idle following end of transmission
- nonpersistent stations are deferential

1-persistent CSMA

- 1-persistent CSMA avoids idle channel time
- 1-persistent CSMA rules:
  1. if medium idle, transmit;
  2. if medium busy, listen until idle; then transmit immediately
- 1-persistent stations are selfish
- if two or more stations waiting, a collision is guaranteed

P-persistent CSMA

- a compromise to try and reduce collisions and idle time
- p-persistent CSMA rules:
  1. if medium idle, transmit with probability p, and delay one time unit with probability (1–p)
  2. if medium busy, listen until idle and repeat step 1
  3. if transmission is delayed one time unit, repeat step 1
- issue of choosing effective value of p to avoid instability under heavy load

Value of p?

- have n stations waiting to send
- at end of tx, expected no of stations is np
  - if np>1 on average there will be a collision
- repeated tx attempts mean collisions likely
- eventually when all stations trying to send have continuous collisions hence zero throughput
- thus want np<1 for expected peaks of n
  - if heavy load expected, p small
  - but smaller p means stations wait longer

CSMA/CD Description

- with CSMA, collision occupies medium for duration of transmission
- better if stations listen whilst transmitting
- CSMA/CD rules:
  1. if medium idle, transmit
  2. if busy, listen for idle, then transmit
  3. if collision detected, jam and then cease transmission
  4. after jam, wait random time then retry

CSMA/CD Operation

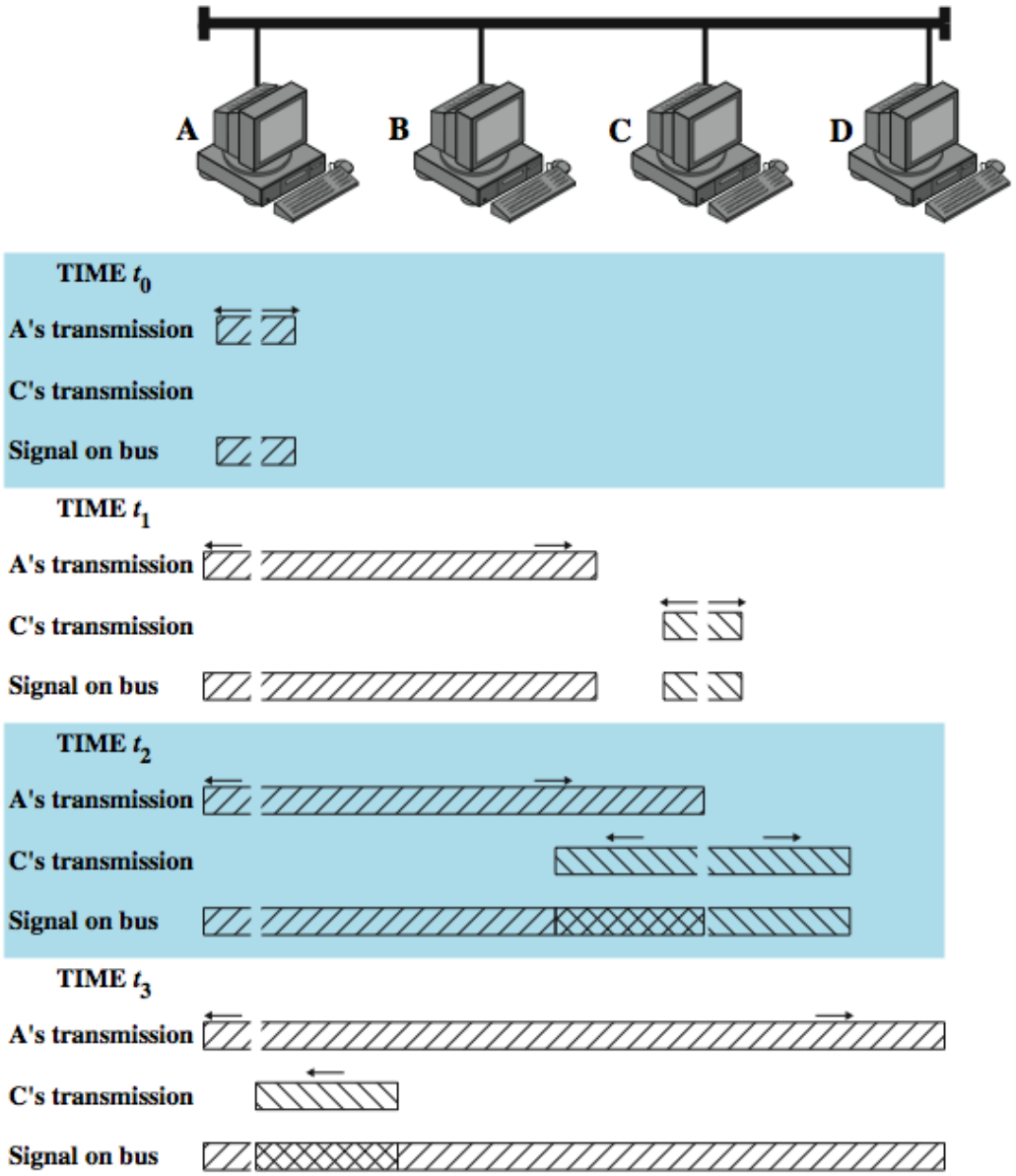

Which Persistence Algorithm?

- IEEE 802.3 uses 1-persistent
- both nonpersistent and p-persistent have performance problems
- 1-persistent seems more unstable than p-persistent
  - because of greed of the stations
  - but wasted time due to collisions is short
  - with random backoff unlikely to collide on next attempt to send

Binary Exponential Backoff

- for backoff stability, IEEE 802.3 and Ethernet both use binary exponential backoff
- stations repeatedly resend when collide
  - on first 10 attempts, mean random delay doubled
  - value then remains same for 6 further attempts
  - after 16 unsuccessful attempts, station gives up and reports error
- 1-persistent algorithm with binary exponential backoff efficient over wide range of loads
- but backoff algorithm has last-in, first-out effect

Collision Detection

- on baseband bus
  - collision produces higher signal voltage
  - collision detected if cable signal greater than single station signal
  - signal is attenuated over distance
  - limit to 500m (10Base5) or 200m (10Base2)
- on twisted pair (star-topology)
  - activity on more than one port is collision
  - use special collision presence signal

CSMA/CA

IEEE 802.11 MAC

Medium Access Control

- MAC layer covers three functional areas
  - reliable data delivery
  - access control
  - security

Reliable Data Delivery

- 802.11 physical / MAC layers unreliable
  - noise, interference, and other propagation effects result in loss of frames
  - even with error-correction codes, frames may not successfully be received
- can be dealt with at a higher layer, e.g. TCP
- more efficient to deal with errors at MAC level
- 802.11 includes frame exchange protocol
  - station receiving frame returns acknowledgment (ACK) frame
  - exchange treated as atomic unit
  - if no ACK within short period of time, retransmit

Four Frame Exchange

- Can use four-frame exchange for better reliability
  - source issues a Request to Send (RTS) frame to dest
  - destination responds with Clear to Send (CTS)
  - after receiving CTS, source transmits data
  - destination responds with ACK
- RTS alerts all stations within range of source that exchange is under way
- CTS alerts all stations within range of destination
- Other stations don’t transmit to avoid collision
- RTS/CTS exchange is required function of MAC but may be disabled

CSMA/CA

Fig. 6.70 (Leon-Garcia)

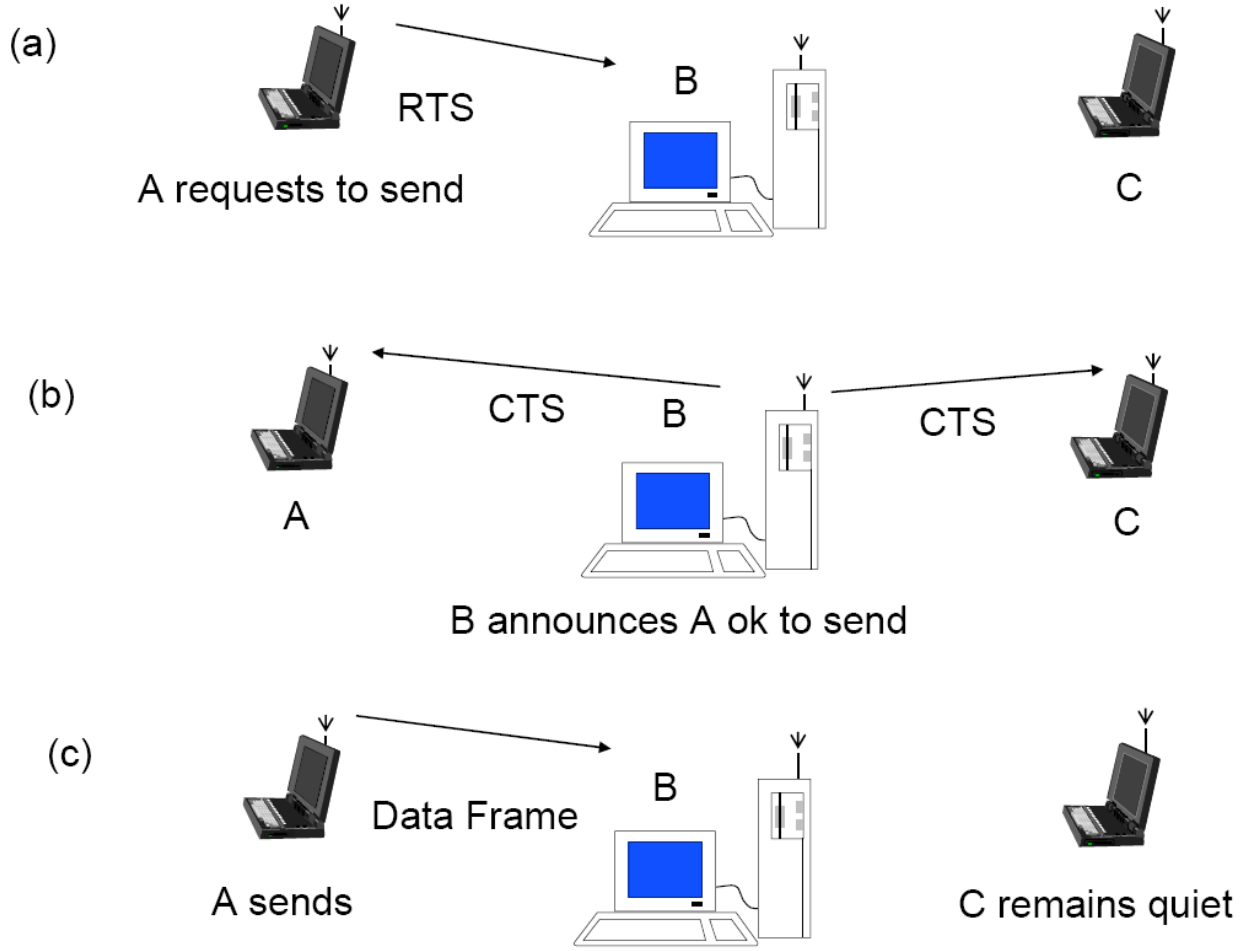

Media Access Control

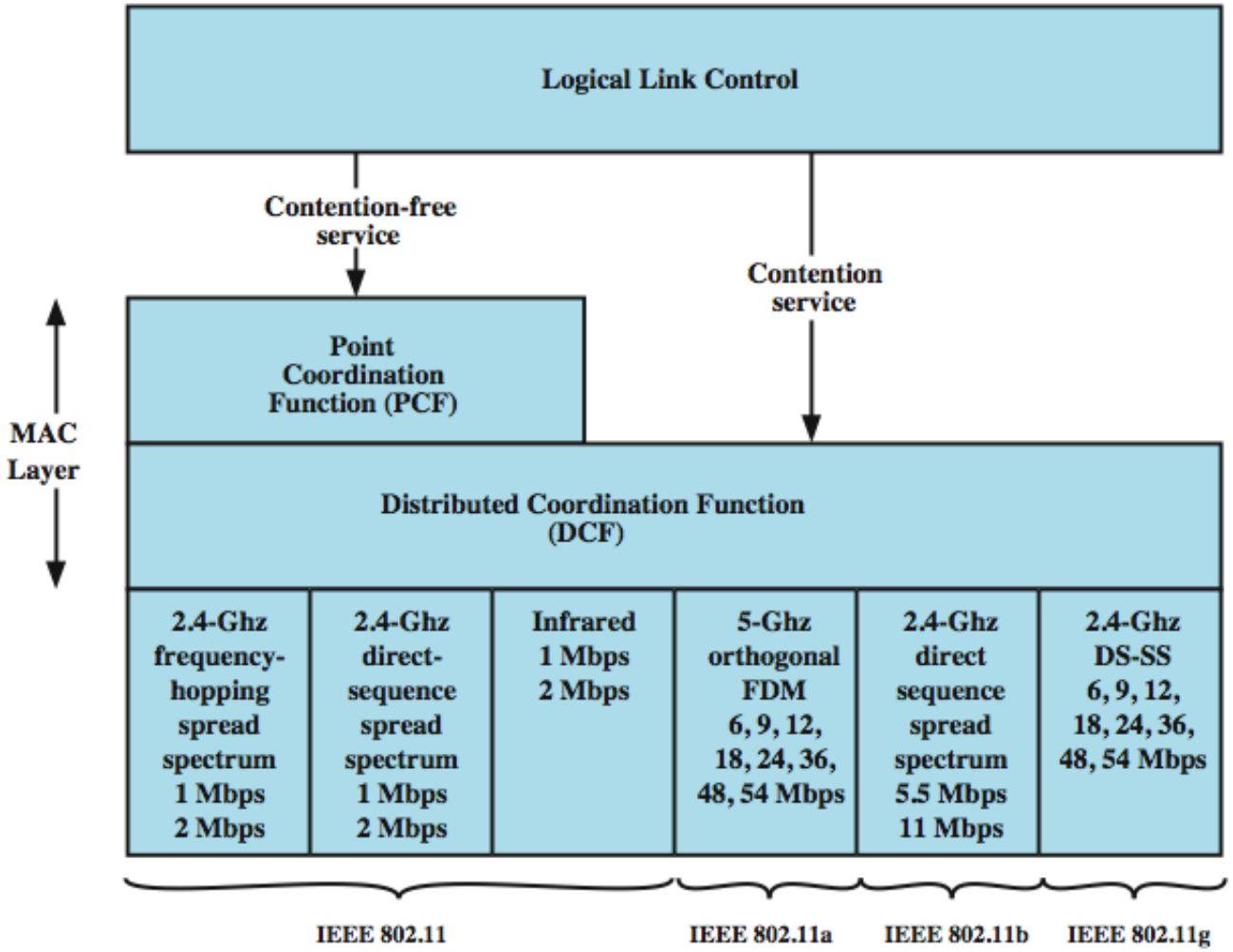

Distributed Coordination Function

- DCF sublayer uses CSMA
  - if station has frame to send it listens to medium
  - if medium idle, station may transmit
  - else waits until current transmission complete
- No collision detection since on wireless network
- DCF includes delays that act as a priority scheme

Basic CSMA/C operations

Fig. 6.69 (Leon-Garcia)

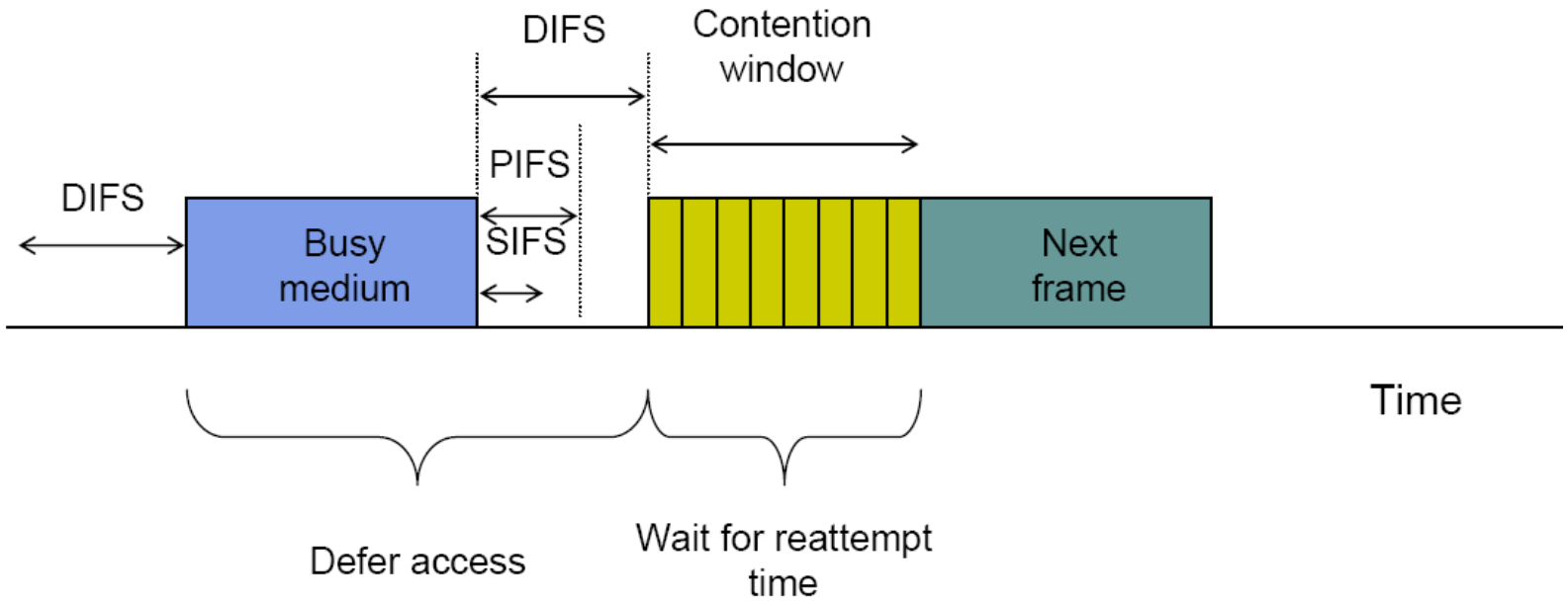

IEEE 802.11 Medium Access Control Logic

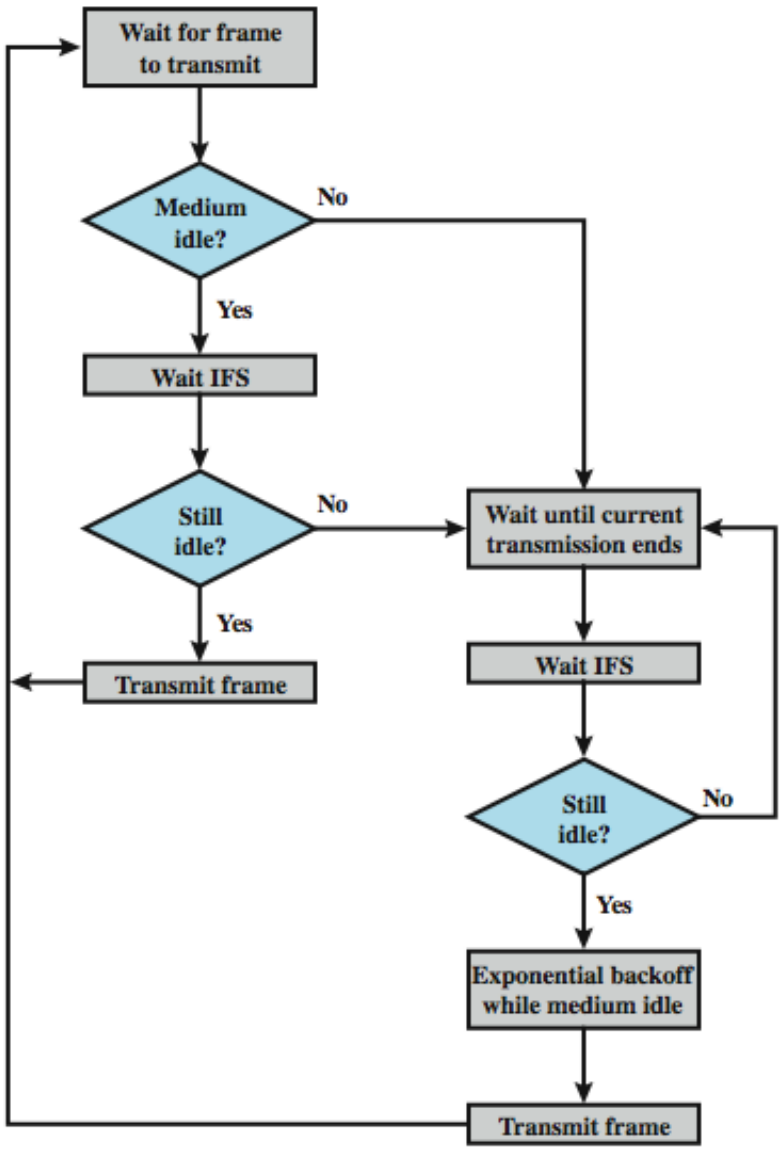

Transmission RTS/CTS

Fig. 6.71 (Leon-Garcia)

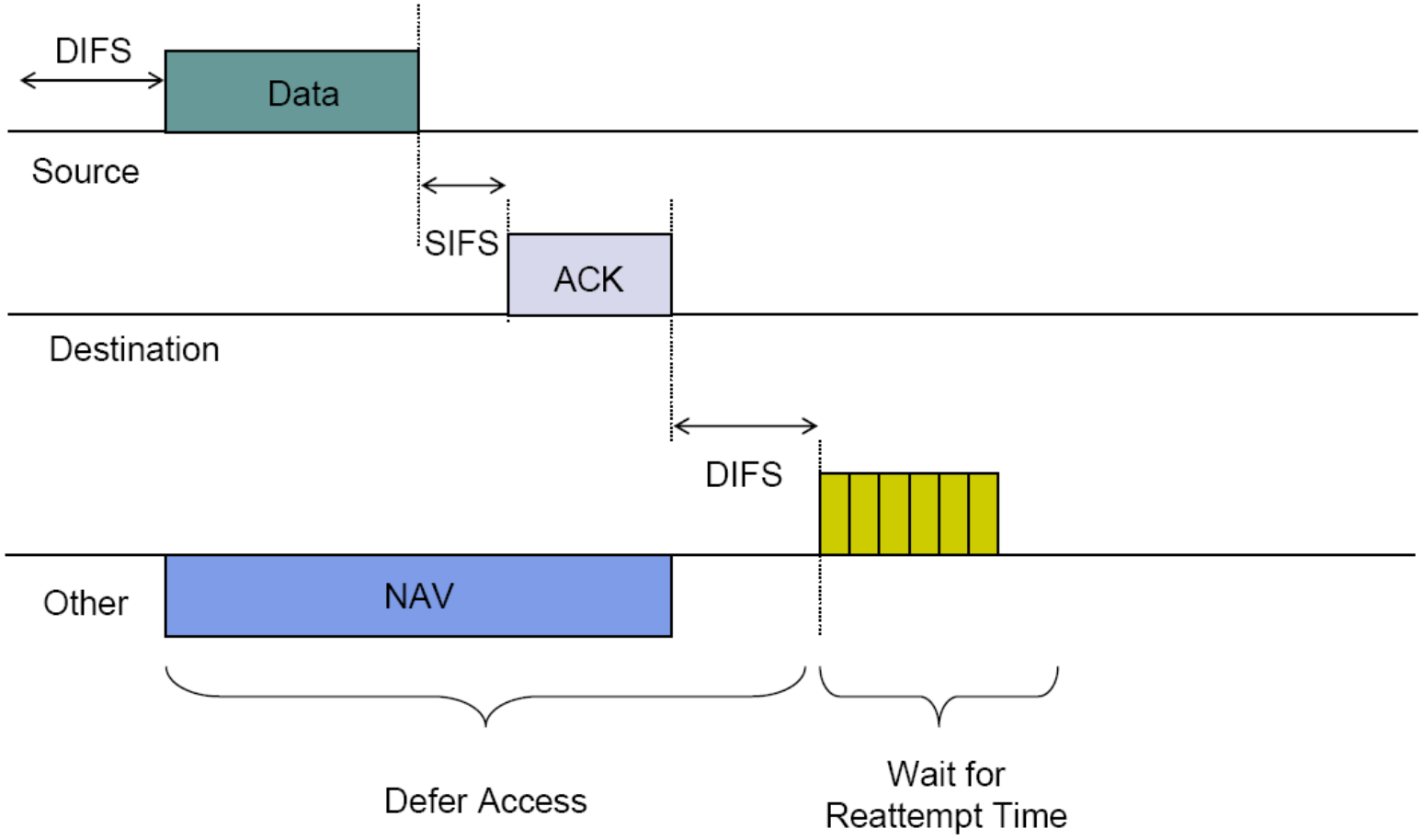

Transmission wit RTS/CTS

Fig. 6.72 (Leon-Garcia)

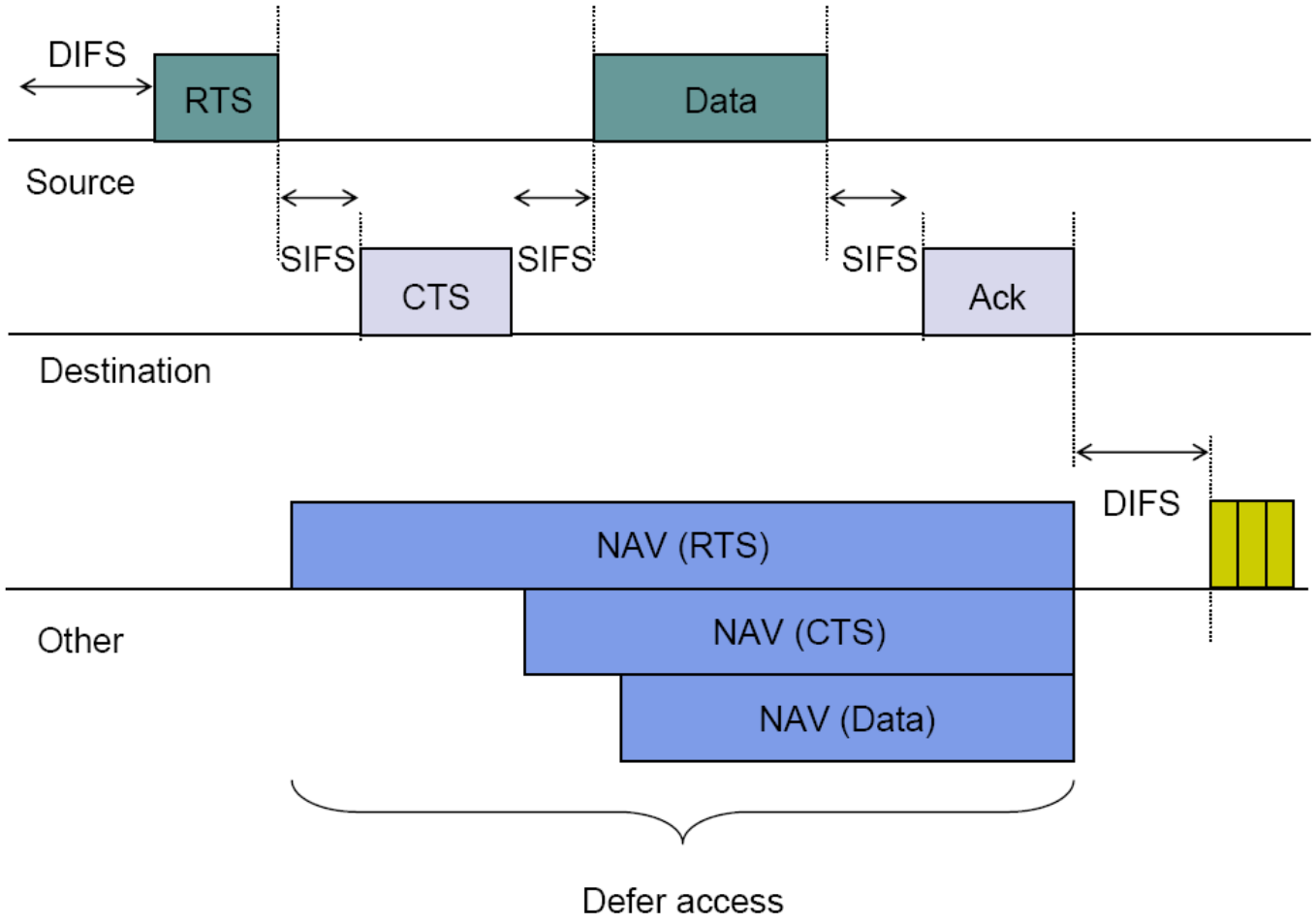

Priority IFS Values

- SIFS (short IFS)
  - for all immediate response actions (see later)
- PIFS (point coordination function IFS)
  - used by the centralized controller in PCF scheme when issuing polls
- DIFS (distributed coordination function IFS)
  - used as minimum delay for asynchronous frames contending for access

SIFS Use

- SIFS gives highest priority
  - over stations waiting PIFS or DIFS time
- SIFS used in following circumstances:
  - Acknowledgment (ACK)
    - station responds with ACK after waiting SIFS gap
    - for efficient collision detect & multi-frame transmission
  - Clear to Send (CTS)
    - station ensures data frame gets through by issuing RTS
    - and waits for CTS response from destination
  - Poll response
    - see Point coordination Function (PCF) discussion next

PIFS and DIFS Use

- PIFS used by centralized controller
  - for issuing polls
  - has precedence over normal contention traffic
  - but not SIFS
- DIFS used for all ordinary asynchronous traffic

IEEE 802.11 MAC Timing
Basic Access Method

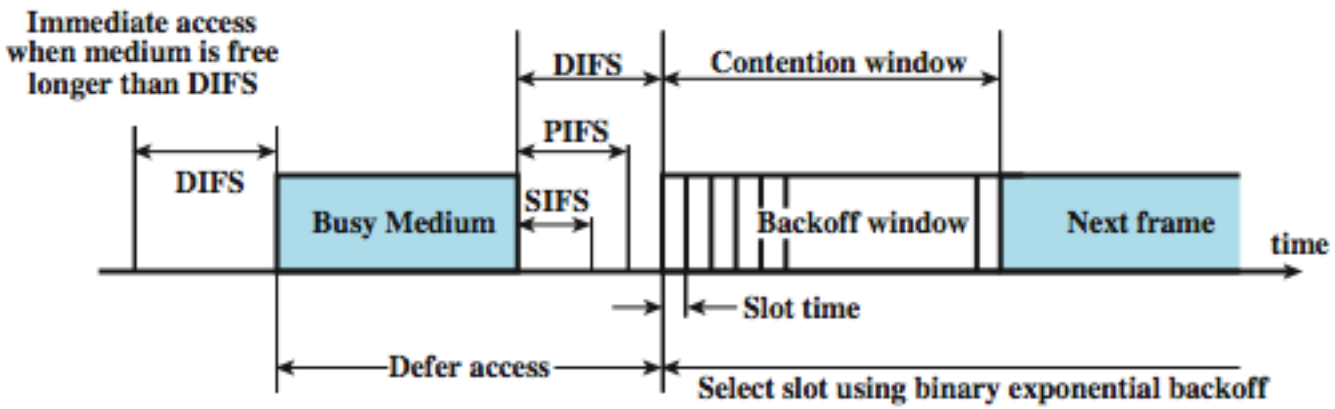

(a) Basic Access Method

Point Coordination Function (PCF)

- alternative access method implemented on top of DCF
- polling by centralized polling master (point coordinator)
- uses PIFS when issuing polls
- point coordinator polls in round-robin to stations configured for polling
- when poll issued, polled station may respond using SIFS
- if point coordinator receives response, it issues another poll using PIFS
- if no response during expected turnaround time, coordinator issues poll
- coordinator could lock out async traffic by issuing polls
- have a superframe interval defined
- not suitable for use in WMNs

Point coordin
frame transfe

Fig. 6.73 (Leon-Garcia)

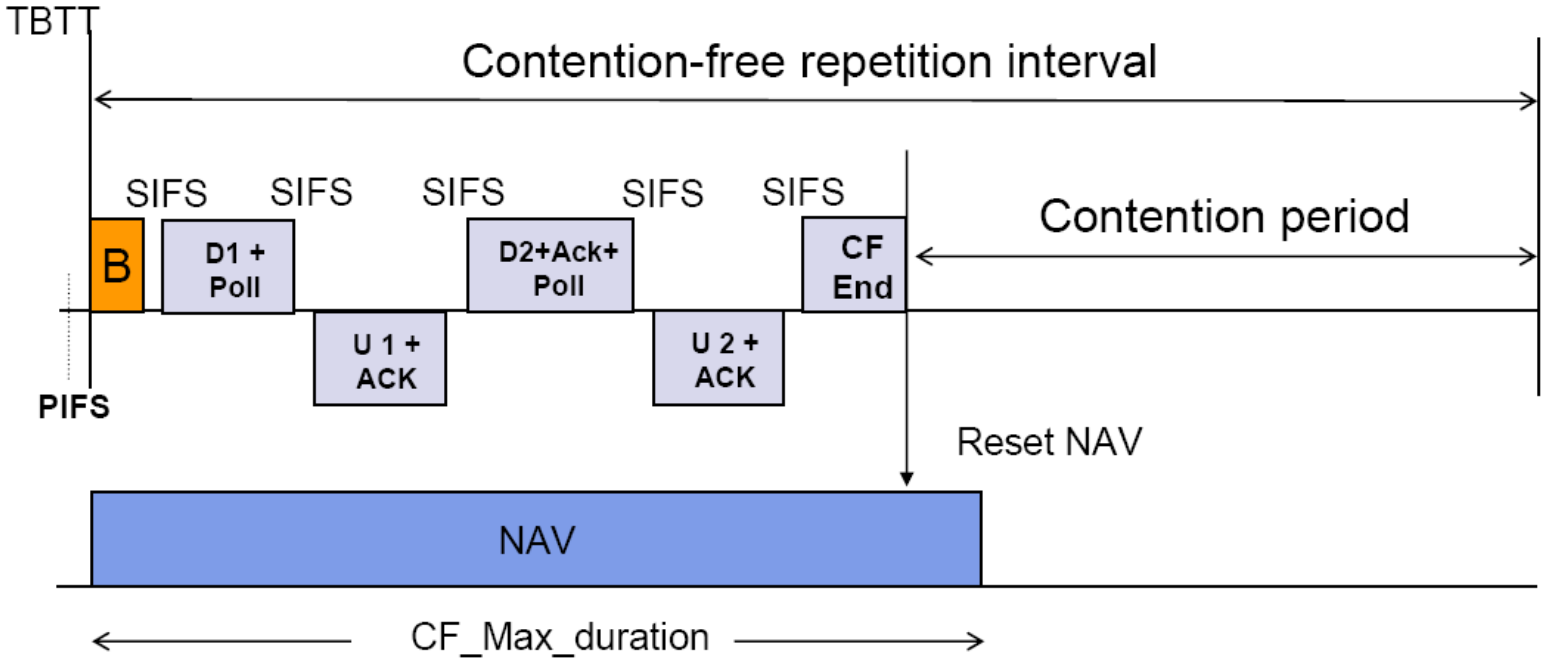

D1, D2 = frame sent by point coordinator
U1, U2 = frame sent by polled station
TBTT = target beacon transmission time
B = beacon frame

PCF Superframe Timing

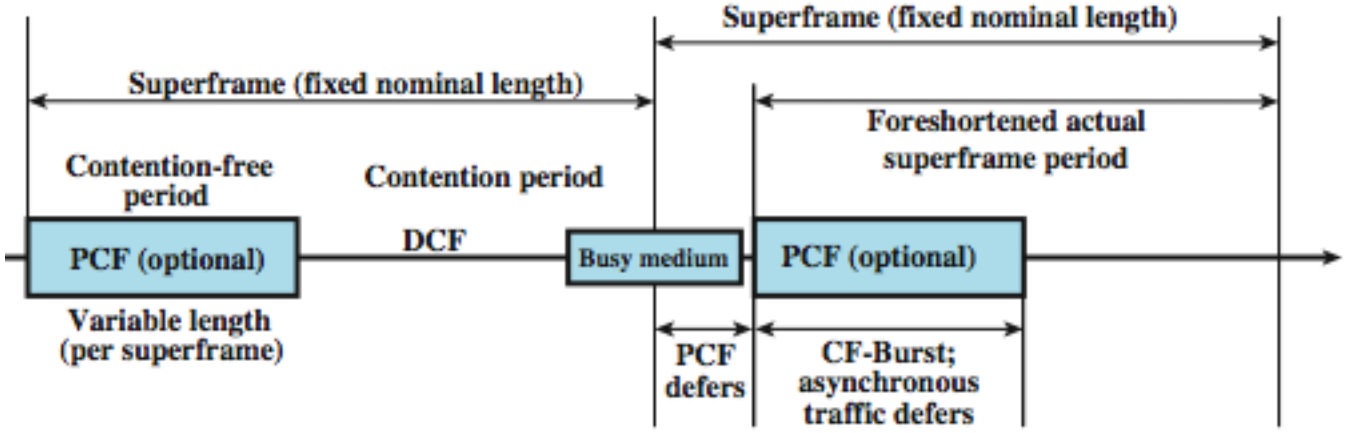

(b) PCF Superframe Construction

IEEE 802.11 MAC Frame Format

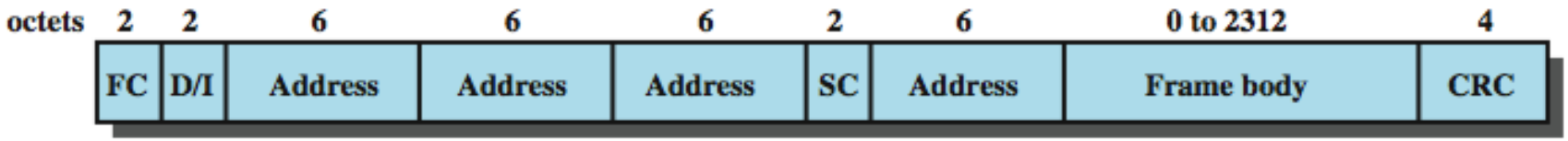

FC = Frame control
D/I = Duration/Connection ID
SC = Sequence control

Control Frames

- Power Save-Poll (PS-Poll)
  - request AP transmit buffered frame when in power-saving mode
- Request to Send (RTS)
  - first frame in four-way frame exchange
- Clear to Send (CTS)
  - second frame in four-way exchange
- Acknowledgment (ACK)
- Contention-Free (CF)-end
  - announces end of contention-free period part of PCF
- CF-End + CF-Ack:
  - acknowledges CF-end to end contention-free period and release stations from associated restrictions

Data Frames – Data Carrying

- eight data frame subtypes, in two groups
- first four carry upper-level data
- Data
  - simplest data frame, contention or contention-free use
- Data + CF-Ack
  - carries data and acknowledges previously received data during contention-free period
- Data + CF-Poll
  - used by point coordinator to deliver data & req send
- Data + CF-Ack + CF-Poll
  - combines Data + CF-Ack and Data + CF-Poll

Data Frames – Not Data Carrying

- other four data frames do not carry user data
- Null Function
  - carries no data, polls, or acknowledgments
  - carries power mgmt bit in frame control field to AP
  - indicates station is changing to low-power state
- other three frames (CF-Ack, CF-Poll, CF-Ack + CF-Poll) same as corresponding frame in preceding list but without data

Management Frames

- used to manage communications between stations and APs
- such as management of associations
  - requests, response, reassociation, dissociation, and authentication

IEEE 802.11e MAC

802.11e MAC

- Defines a number of QoS enhancements to 802.11 MAC
- See short descriptions at wikipedia.org

QoS Limitations of 802.11

- DCF (Distributed Coordination Function)
  - Only support best-effort services
  - No guarantee in bandwidth, packet delay and jitter
  - Throughput degradation in the heavy load
- PCF (Point Coordination Function)
  - Inefficient central polling scheme
  - Unpredictable beacon frame delay due to incompatible cooperation between CP and CFP modes
  - Transmission time of the polled stations is unknown

Overview of 802.11e

- Formed in Sept. 1999.
- The first draft was available in late 2001
- Aims to support both IntServ and DiffServ
- New QoS mechanisms – HCF (Hybrid Coordination Function): 2 modes
  - EDCA (Enhanced Distributed Channel Access)
    - contention-based, distributed
  - HCCA (HCF controlled channel access)
    - requires a central control entity and synchronization among nodes
    - not suitable for WMNs
- Backward compatible with DCF and PCF

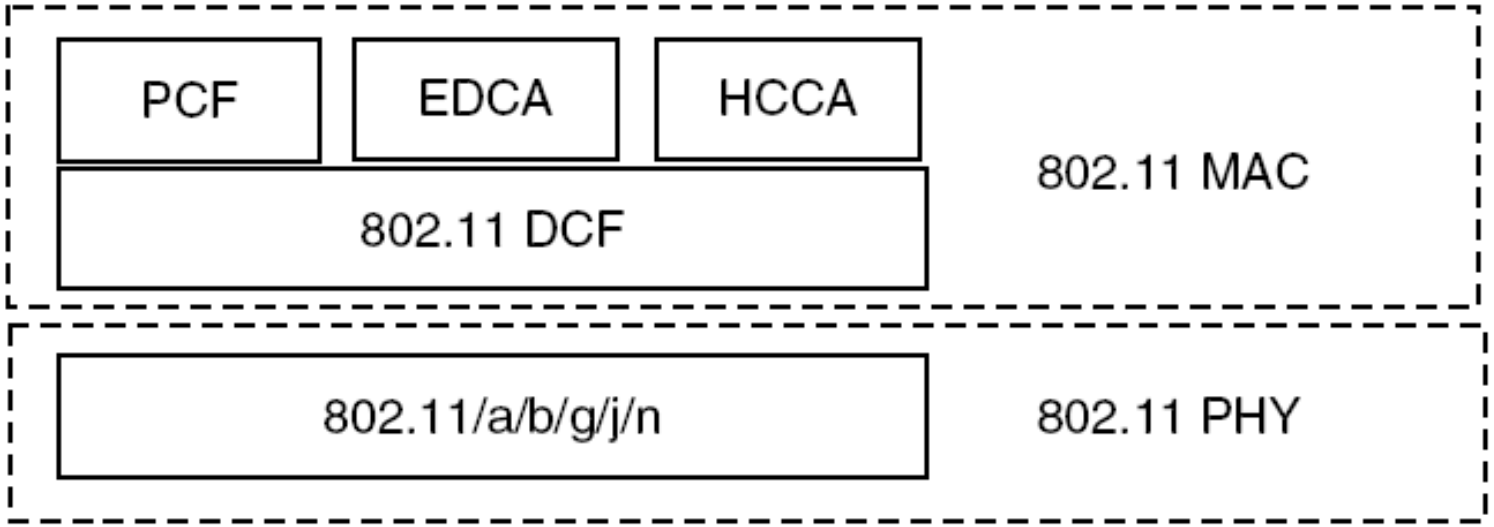

802.11e MAC architecture

Wireless Multimedia Extensions (WME)

- a.k.a Wi-Fi Multimedia (WMM)
- subset of 802.11e to be implemented by the industry
- 4 access categories (ACs): voice, video, best effort, and background
- no guaranteed throughput though
- suitable for simple applications that require QoS, such as Voice over IP (VoIP) on Wi-Fi phones

EDCA

- enhances the original DCF by providing prioritized medium access based on access categories (ACs)
- IEEE 802.11e defines four ACs, each having its own queue and set of QoS parameters
- priority between ACs is realized by setting different values for the EDCA parameters
  - arbitration interframe space number (AIFSN),
  - minimum contention window (CWmin),
  - maximum contention window (CWmax),
  - transmission opportunity (TXOP) limit

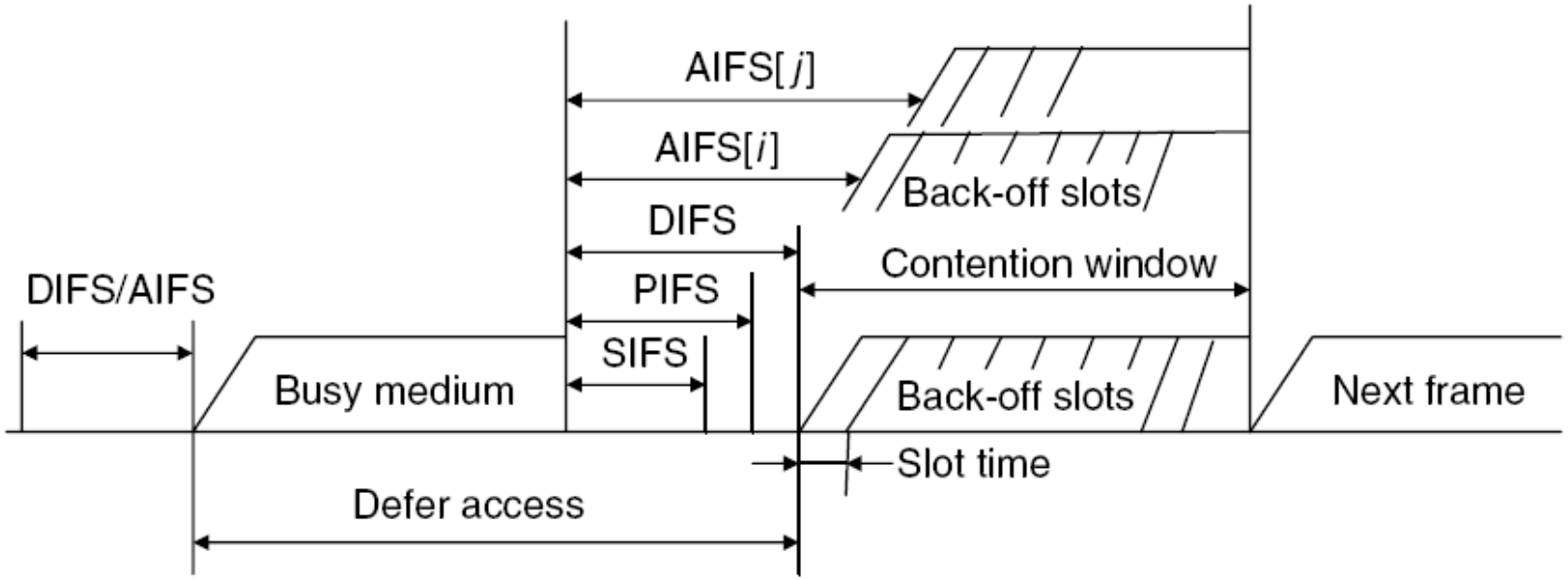

Relationship of different IFSs

AC	CW_{min}	CW_{max}	AIFSN	TXOP Limit For 11b PHY	TXOP Limit For 11a PHY
Background (AC_BK)	CW_{min}	CW_{max}	7	0	0
Best effort (AC_BE)	CW_{min}	CW_{max}	3	0	0
Video (AC_VI)	$(CW_{min} + 1)/2 - 1$	CW_{min}	2	6.016 ms	3.008 ms
Voice (AC_VO)	$(CW_{min} + 1)/4 - 1$	$(CW_{min} + 1)/2 - 1$	2	3.264 ms	1.504 ms

Default EDCA parameter set

References

- WMN textbook, 5.1– 5.2
- Communication Networks by A. Leon-Garcia
- Data & Computer Communications by William Stallings